Horizontal Shear Design of Composite Beams in Prestressed Concrete Construction

CE 4420 – Principles of Prestressed Concrete

Instructor:

Dr. Ayman Okeil

Prepared by:

Sabit Timilsina

Department of Civil & Environmental Engineering

Louisiana State University

May 1, 2026

1. Introduction

The United States maintains more than 600,000 highway bridges documented in the National Bridge Inventory (NBI), in which approximately 203,000 (roughly 35 %) used prestressed concrete as the primary structural materials. More than 50 % of the bridges built since 1970 are made of prestressed concrete, making it the most popular bridge material in recent decades [1]. The vast majority of these structures are composite: a precast, prestressed concrete girder (usually an AASHTO I-girder, bulb-tee, or box beam) and a cast-in-place (CIP) reinforced concrete deck slab acts together to make a single structural unit with significantly high flexural capacity than either component alone. Composite prestressed construction is also common in building projects, where double-tee beams with CIP toppings are used in parking structures and hollow-core slabs with structural toppings are used in commercial and residential floor systems (Figure 1).

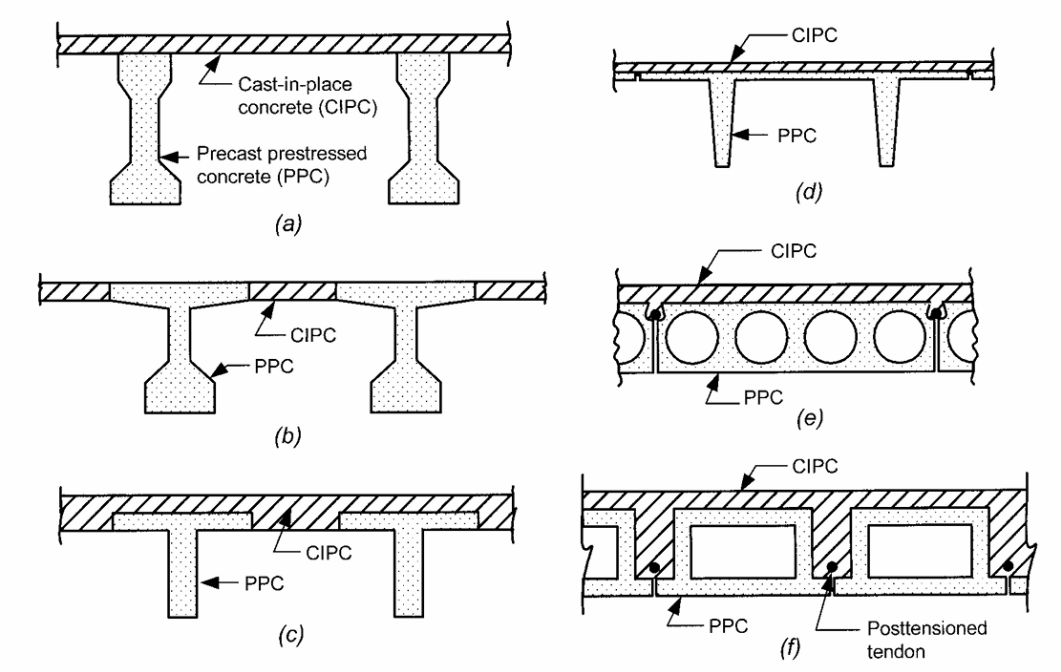

Figure 1: Typical composite prestressed concrete member configurations with cast-in-place concrete (CIPC) toppings and precast prestressed concrete (PPC) elements. Reproduced from [2].

For the composite section to reach its maximum theoretical flexural strength, the interface between the precast element and the CIP topping must be able to transfer horizontal shear forces without sliding. Figure 2 shows that horizontal shear at the interface arises from the compressive stress resultant in the topping slab over the span length. If the interface cannot resist the shear force, the two elements (PPC and CIP) act independently, each bending about its own centroidal axis. This makes the combined moment capacity much lower than that of the fully composite section. The interface shear is transferred across the section through a combination of three mechanism,

i.e., cohesion and friction at the contact suface due to roughening of surface, and mechanical interlock provided by shear ties (usually U-stirrups) that extend from the precast member into the CIP toppings.

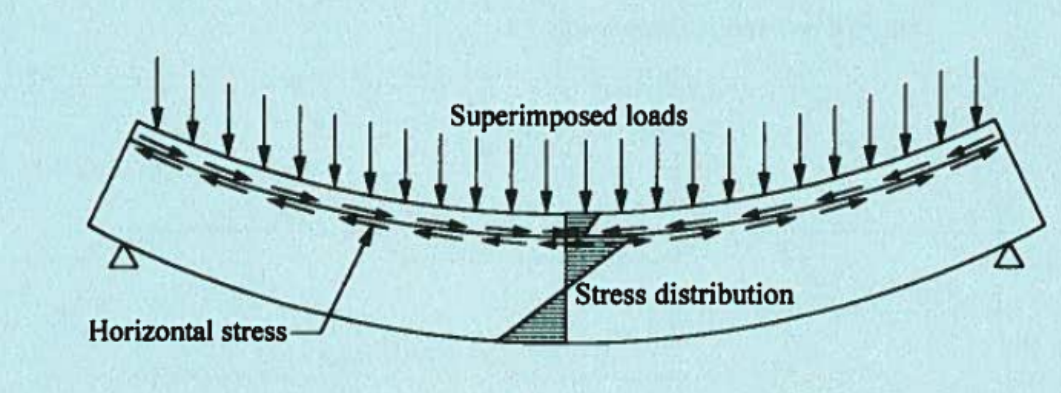

Figure 2: Horizontal interface shear stress in a composite prestressed beam under superimposed loading. Reproduced from Tadros et al. [3].

This report presents the fundamentals of horizontal shear design for composite beams in prestressed concrete construction, covering the underlying theory, the relevant provisions of ACI 318-19 (Section 16.4), and a complete worked design example demonstrating the step-by-step procedure for determining the required horizontal shear reinforcement at the interface of a precast prestressed girder and CIP topping slab.

2. Composite Beam Behavior

2.1 Definition and Components

A composite beam in typical prestressed concrete construction consists of two separate concrete elements that are connected together to act as a composite section. The typical configuration includes:

- **Precast Prestressed Element:** This type of member is produced in a factory and includes typical section like I-girder, bulb-tee, double-tee, inverted-tee, and hollow-core slab. It consists of prestressing strands and carries the whole construction load before the topping is placed. The precast member is manufactured under controlled environment, which allows us to use high strength concrete and precise prestressing strand placement.
- **Cast-in-Place Topping Slab:** A cast-in-place topping slab is placed at the job site and includes normal-weight or lightweight concrete, typically 2 to 6 inches thick. It is cast on top of the precast member and becomes part of the composite section after curing. Once the topping

has cured, it increases the compression flange area and improves the overall flexural capacity of the member. The topping slab generally has lower strength than the precast element.

2.2 Stages of Loading

The design of composite beams must account for multiple stages of loading, each phase has different section properties and stress distribution. The transfer stage of loading of precast concrete element is already discussed in previous chapters. This section only focuses on non-composite action and composite action loading.

1. **Stage 1 – Non-Composite Action:** After the precast element is transported and placed on its supports, the CIP topping is caster over this element. Before the topping hardens, the precast element carries its self-weight and the weight of the topping. The precast member section property are only used for the calculation of strength in this stage.

2. **Stage 2 – Composite Action:** After the topping has cured and gained enough strength, the precast element and CIP topping act together as one composite section. At this stage, the composite section carries the superimposed dead loads and live loads. The section properties of both the precast member and the topping are used for the strength calculation, and an appropriate adjustment is made for the different in concrete modulus.

2.3 Transformed Section Properties

When the precast girder and the CIP topping have different concrete strengths, their stiffnesses are also different. In this case, the composite section properties are calculated using the transformed section method. The topping slab is transformed into an equivalent girder-concrete area by using the modular ratio, n, which is shown below:

$$n = \frac{E_{c,\text{topping}}}{E_{c,\text{girder}}} = \frac{\sqrt{f'_{c,\text{topping}}}}{\sqrt{f'_{c,\text{girder}}}} \tag{1}$$

The transformed width of the topping slab is then obtained by multiplying the effective slab width by n.

$$b_{\text{transformed}} = n \cdot b_{\text{eff}} \tag{2}$$

2.4 Importance of Interface Shear Transfer

For the composite section to develop its full flexural strength, the horizontal shear stress at the interface must be transferred without slip. If the interface fails to resist the horizontal shear, the

precast member and the topping do not act as composite section. Instead, they behave like two separate members placed on top of each other. To illustrate this effect, consider a rectangular beam with width b and total depth h. The moment of inertia of solid composite section is:

$$I_{\text{composite}} = \frac{bh^3}{12} \tag{3}$$

If the same beam is split horizontally at the middle into two unbonded halves, each part can bend independently. The total moment of inertia of the two separate parts become:

$$I_{\text{stacked}} = 2 \times \frac{b(h/2)^3}{12} = \frac{bh^3}{48} = \frac{I_{\text{composite}}}{4} \tag{4}$$

This shows that the non-composite section of that particular beam has only one-fourth of the elastic flexural stiffness of the fully composite section. Therefore, proper horizontal shear transfer is essential for maintaining composite action and achieving the intended structural performance.

3. Horizontal Shear – Theoretical Background

3.1 Origin of Horizontal Shear

The horizontal shear stress at the interface between the precast member and the cast in place concrete slab is originated by the loads acting only in the composite section. The loads acting in the composite section are additional dead load and live load if the precast beam is not supported during casting of slab. If the precast beam is supported during the casting of slab then the additional slab weight is also added to calculate the loads acting in the composite section. The horizontal shear stress at the interface due to additional loads in composite section is given by:

$$v_h = \frac{V \cdot Q}{I \cdot b_v} \tag{5}$$

where:
v_h = horizontal shear force per unit length
V = factored vertical shear acting at the composite section only
Q = first moment of the area of the topping slab about the neutral axis of the composite section
I = moment of inertia of the composite section
b_v = width of the contact surface
For he design purpose, a simplified equation for horizontal shear stress can be used:

$$v_h = \frac{V}{b_v \cdot d_{pc}} \tag{6}$$

where d_{pc} is the distance from the extreme compression fiber to the center of the prestressing steel.

In the case of ultimate strength design, V is replaced by V_u (factored total shear force).

4. Factors Affecting Horizontal Shear Capacity

The factors which influence the horizontal shear capacity of a composiste beam are:

- **Surface roughness:** A roughened surface significantly increases the interfacial shear strength due to frictional resistance and aggregate interlocking.
- **Concrete strength:** The lower of the two concrete strengths controls the interface capacity. Higher concrete strength increases both cohesion and frictional resistance.
- **Clamping reinforcement:** Increasing the area of ties or decreasing their spacing increases the clamping force and thus the shear-friction capacity.
- **Normal force:** Permanent compressive forces normal to the interface plane improves the horizontal shear resistance, which tensile force reduces it.
- **Surface cleanliness:** The surface must be clean and free of laitance, dirt, oil, curing compounds, and other contaminants that could reduce bond and friction.

5. ACI 318-19 Design Provisions

5.1 Section 16.4 – Horizontal Shear

The horizontal shear forces in the composite concrete flexural member is discussed in ACI 318-19 Section 16.4 [4]. The code states that the full horizontal shear forces should be transferred through the contact surface and must satisfy the following equation:

$$\phi V_{nh} \geq V_u \tag{7}$$

where ϕ is the strength reduction factor (0.75 for shear), V_{nh} is the nominal horizontal shear strength, and V_u is the factored horizontal shear force.

5.2 Nominal Horizontal Shear Strength

ACI 318-19 Section 16.4.4 provides the following provisions for nominal horizontal shear strength: **Case (a):** When the contact surface is intentionally roughened for the roughness amplitude of 1/4 in., the nominal horizontal shear strength is minimum of the following equations:

$$V_{nh} = \lambda \left(260 + 0.6 \frac{A_v f_y}{b_v s} \right) b_v d \tag{a}$$

$$V_{nh} = 500 b_v d \tag{b}$$

Case (b): When the concrete is placed against hardened concrete which is not intentionally roughened:

$$V_{nh} = 80 b_v d \tag{c}$$

Case (c): For other cases (contact surface intentionally roughened but $A_v < A_{v,\min}$):

$$V_{nh} = 80 b_v d \tag{d}$$

where:

λ = 1.0 for normal-weight concrete

A_v = area of shear transfer reinforcement, in.^{2}

f_y = yield strength of shear reinforcement, psi

b_v = width of the contact surface, in.

s = spacing of shear transfer reinforcement, in.

d = distance from the extreme compression fiber to the centroid of longitudinal tension reinforcement, d should not be taken less than $0.80h$ for prestressed concrete members.

The contact surface shall be clean and free of laitance in all cases.

5.3 Minimum Horizontal Shear Reinforcement Requirements

ACI 318-19 Section 16.4.6 specifies the following minimum requirements for the horizontal Shear reinforcement. $A_{v,\min}$ shall be the greater of (a) and (b) :

(a) $A_{v,\min} = 0.75\sqrt{f'_c} \dfrac{b_w s}{f_y}$

(b) $A_{v,\min} = 50 \dfrac{b_w s}{f_y}$

where:

f'_c = specified compressive strength of concrete, psi

b_w = width of the contact surface, in.

s = spacing of shear transfer reinforcement, in.

f_y = yield strength of shear transfer reinforcement, psi

The maximum tie spacing shall not exceed:

$$s \leq \min(4\,t_{\min},\ 24 \text{ in.}) \tag{9}$$

where $t_{\min}$ is the least dimension of the supported element.

6. Design Example

This section presents a complete worked example for horizontal shear design at the interface of a precast prestressed I-girder and a CIP concrete topping slab.

6.1 Problem Statement

A simply supported composite floor beam spans 40 feet and consists of a precast prestressed concrete I-girder with a CIP normal-weight concrete topping slab. The beam is subjected to the following loading conditions and geometry:

Given Information

Table 1: Design parameters for the composite beam example.

Parameter	**Value**
Span length, L	40 ft
Precast girder type	PCI BT-28 (Bulb-Tee)
Girder depth, h_{girder}	28 in.
Top flange width of girder, b_v	18 in.
CIP topping thickness, t_s	4 in.
CIP topping effective width, b_{eff}	96 in.
Concrete strength – precast girder, $f'_{c,\text{girder}}$	6,000 psi
Concrete strength – CIP topping, $f'_{c,\text{topping}}$	4,000 psi
Yield strength of ties, f_y	60,000 psi
Composite section effective depth, d	29.5 in.
Factored superimposed dead load, w_{SD}	0.4 kip/ft
Factored live load, w_L	1.8 kip/ft
Factored self-weight + topping, w_{DL}	1.0 kip/ft
Contact surface condition	Intentionally roughened to 1/4 in.

6.2 Step 1 – Determine Factored Shear Demand

The total factored load on the composite beam is:

$$w_u = w_{DL} + w_{SD} + w_L = 1.0 + 0.4 + 1.8 = 3.2 \text{ kip/ft} \tag{10}$$

The maximum factored vertical shear force:

$$V_u = \frac{w_u \cdot L}{2} = \frac{3.2 \times 40}{2} = 64.0 \text{ kips} \tag{11}$$

6.3 Step 2 – Compute Horizontal Shear Stress

The required horizontal shear stress at the interface is computed as:

$$v_u = \frac{V_u}{b_v \cdot d} = \frac{64{,}000}{18 \times 29.5} = 120.53 \text{ psi} \tag{12}$$

6.4 Step 3 – Check ACI 318-19 Limits

Since the contact surface is intentionally roughened to a full amplitude of 1/4 in. and ties will be provided, we can use Case (a) of Section 16.4.4. The maximum permitted shear stress is 500 psi. Our demand of 120.5 psi is well within this limit, so the direct provisions of Section 16.4.4 are applicable.
First, check if minimum shear strength without ties (Case d) is sufficient:

$$\phi V_{nh,\text{no ties}} = \phi \times 80 \times b_v \times d = 0.75 \times 80 \times 18 \times 29.5 = 31{,}860 \text{ lb} = 31.9 \text{ kips} \tag{13}$$

Since $V_u = 64.0$ kips > 31.9 kips, **ties are required**.

6.5 Step 4 – Determine Required Tie Reinforcement

Using ACI 318-19 Table 16.4.4.2 for a roughened surface with ties, the nominal horizontal shear stress capacity is:

$$v_{nh} = \lambda \left(260 + 0.6 \, \frac{A_v \, f_y}{b_v \, s} \right) \leq 500 \text{ psi} \tag{14}$$

The required nominal shear stress is:

$$v_{nh,\text{req'd}} = \frac{V_u}{\phi \cdot b_v \cdot d} = \frac{64{,}000}{0.75 \times 18 \times 29.5} = \frac{64{,}000}{398.25} = 160.7 \text{ psi} \tag{15}$$

With minimum horizontal shear reinforcement, v_{nh} = 260 psi > 160.7 psi. The base capacity of the roughened surface (260 psi) already exceeds the required nominal capacity without the requirement

of reinforcement term. So, minimum ties can be provided.

6.6 Step 5 – Provide Minimum Ties

$A_{v,\min}$ shall be the greater of:

(a) $A_{v,\min} = 0.75\sqrt{f'_c}\,\dfrac{b_v\,s}{f_y} = 0.75\sqrt{4{,}000}\,\dfrac{18\times s}{60{,}000} = 0.01423\,s$

(b) $A_{v,\min} = 50\,\dfrac{b_v\,s}{f_y} = 50\,\dfrac{18\times s}{60{,}000} = 0.015\,s$

Case (b) governs since $0.015s > 0.01423s$.
Using #3 U-stirrups ($A_v = 2\times 0.11 = 0.22$ in.^{2} per stirrup), set $A_v = A_{v,\min}$:

$$0.22 = 0.015\,s \quad \Rightarrow \quad s_{\max} = \frac{0.22}{0.015} = 14.67 \text{ in.} \tag{16}$$

The maximum spacing is also limited to:

- $4\times$ least dimension of supported element $= 4\times 4 = 16$ in.
- 24 in.
- Required spacing from calculation $= 14.67$ in.

Hence, the governing maximum spacing is 14.67 in. **Use $s = 14$ in. for practicality.**

6.7 Step 6 – Verify Design Capacity

With #3 U-stirrups at 14 in. spacing, the tie reinforcement ratio is:

$$\rho_v = \frac{A_v}{b_v\cdot s} = \frac{0.22}{18\times 14} = 0.000873 \tag{17}$$

The nominal horizontal shear stress capacity is:

$$v_{nh} = 260 + 0.6\times 0.000873\times 60{,}000 = 260 + 31.4 = 291.4 \text{ psi} \tag{18}$$

The design horizontal shear capacity is:

$$\phi V_{nh} = \phi\cdot v_{nh}\cdot b_v\cdot d = 0.75\times 291.4\times 18\times 29.5 = 116{,}010 \text{ lb} = 116.0 \text{ kips} \tag{19}$$

$$\boxed{\phi V_{nh} = 116.0 \text{ kips} \;>\; V_u = 64.0 \text{ kips} \quad \checkmark \textbf{ OK}} \tag{20}$$

6.8 Design Summary

Table 2: Summary of horizontal shear design results.

Item	Result
Factored shear demand, V_u	64.0 kips
Required nominal shear stress	160.7 psi
Interface condition	Roughened $\geq$ 1/4 in.
Horizontal shear reinforcement	#3 U-stirrups @ 14 in.
Design capacity, ϕV_{nh}	116.0 kips $>$ 64.0 kips ✓

7. Detailing Considerations

7.1 Surface Preparation

The condition of the contact surface is one of the most important factors affecting horizontal shear capacity. ACI 318 recognizes three surface conditions: intentionally roughened to a full amplitude of at least 1/4 in. (6 mm), smooth (as-cast without intentional roughening), and surfaces with shear keys. For composite beams with precast prestressed girders, intentional roughening is standard practice and is typically achieved during fabrication by raking, brooming, or retarding and exposing the aggregate on the top surface of the precast member.

7.2 Tie Anchorage and Detailing

The horizontal shear ties must be properly anchored in both the precast member and the CIP topping to be effective. In practice, the U-stirrups used for vertical shear in the precast girder are extended above the top of the girder so that they project into the CIP topping slab. The ties must develop their yield strength on both sides of the interface, which generally requires standard hooks or adequate embedment length.

- Ties should extend at least the minimum development length into the CIP topping, or be hooked with a standard 90° or 180° hook.
- The ties must be hooked with the longitudinal reinforcement in both the precast member and the topping.
- At regions of high shear (near supports), tighter tie spacing may be needed.
- Ties used for horizontal shear can also serve as vertical shear reinforcement but they should satisfy both sets of requirements simultaneously.

7.3 Construction Sequence Considerations

The construction sequence affects the stresses and deformations in the composite member. Before the topping is placed, the precast member carries its own weight and the weight of the wet concrete. Shoring or reshoring may be used to reduce the stresses in the precast member during this stage. Once the topping cures, the composite section resists all subsequent loads. The designer should ensure that the interface can handle the shear demands from all loading stages that occur after composite action is established.

References

[1] FHWA. National bridge inventory (NBI) database. Federal Highway Administration, U.S. Department of Transportation, Washington, DC, 2021.

[2] Antoine E. Naaman. *Prestressed Concrete Analysis and Design*. McGraw-Hill, New York, NY, 1982.

[3] Maher K. Tadros, Sameh S. Badie, and Mounir R. Kamel. Girder/deck connection for rapid removal of bridge decks. *PCI Journal*, 47(3):58–69, 2002.

[4] ACI Committee 318. *Building Code Requirements for Structural Concrete (ACI 318-19) and Commentary (ACI 318R-19)*. American Concrete Institute, Farmington Hills, MI, 2019.